PEARSON™ CLAMP-ON CURRENT MONITOR MODEL 7810

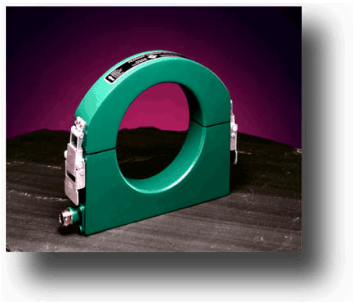

Sensitivity	0.1 Volt/Ampere ±1%
Output resistance	50 Ohms
Maximum peak current	5,000 Amperes
Maximum rms current	150 Amperes
Droop rate	7 %/millisecond
Useable rise time	50 nanoseconds
Current time product	0.4 Ampere-second maximum
Low frequency 3dB point	10 Hz (typical)
High frequency 3dB point	7.0 MHz (typical)
I/f figure	2.0 rms Amperes/Hz
Output connector	BNC (UG-290 A/U)
Operating temperature	0 to 65°C
Weight	6 pounds

© 2005 Pearson Electronics, Inc. 7810.wpd 050330

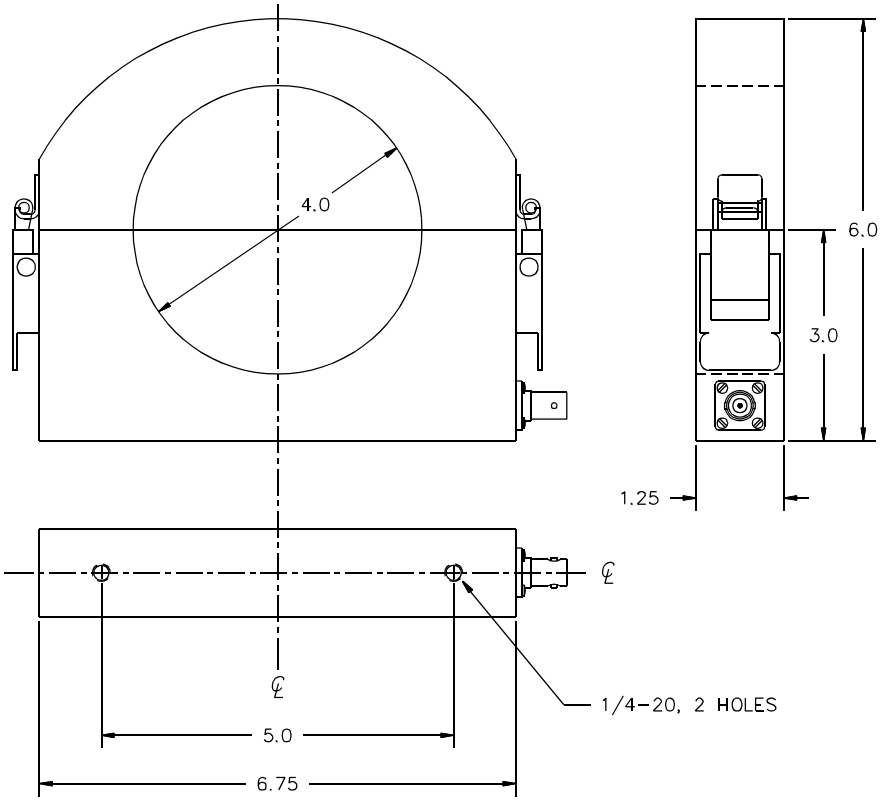

Pearson Electronics, Inc. • 4009 Transport Street • Palo Alto, CA 94303
Telephone 650-494-6444 • FAX 650-494-6716 • www.pearsonelectronics.com